Host Utilities

TATA POWER

TATA POWER-DDL Towards a Greener Tomorrow

BSES Rajdhani Power Limited

BSES Yamuna Power Limited

NPCL NOIDA POWER COMPANY LIMITED

Knowledge Partner

Power Foundation of India

SESSION PARTNER

Wirepas

ORGANIZER

ISGF India Smart Grid Forum

India SMART UTILITY Week 2026

10 – 14 March 2026, New Delhi

Supporting Ministries

MINISTRY OF POWER GOVERNMENT OF INDIA

NITI Aayog

MINISTRY OF POWER GOVERNMENT OF INDIA CENTRAL ELECTRICITY AUTHORITY

DEPARTMENT OF SCIENCE & TECHNOLOGY

AIDA Collaboration | Innovation | Excellence

Session: Smart metering and smart data analytics

Interoperable RF mesh for future-scale in India (and beyond)

Presented by

SEBASTIEN PELLORCE, SVP AMI, INDIA, WIREPAS

isuw@isuw.in www.isuw.in @ISUW_India @India Smart Utility Week (ISUW) @India Smart Utility Week (ISUW) @indiasmartgridforum

CONNECTING SMART METERS SINCE 2014.

Wirepas

Proven mesh connectivity at massive scale.

- Founded in 2010
- HQ in Europe with offices in 10 countries
- Connecting over 20 million devices worldwide
- 220+ partners
- Contributor & first to implement the NR+ standard

COMMITTED TO INDIA SINCE 2018

2026 — Full interoperability with Wirepas Certified in India. 1M+ meters connected with Wirepas Dual Communication.

2025 — 10 M smart meters deployed in India

2023 — 1 M meters deployed in India

2022 — 99.9% SLA reliability in India

2018 — India market entry

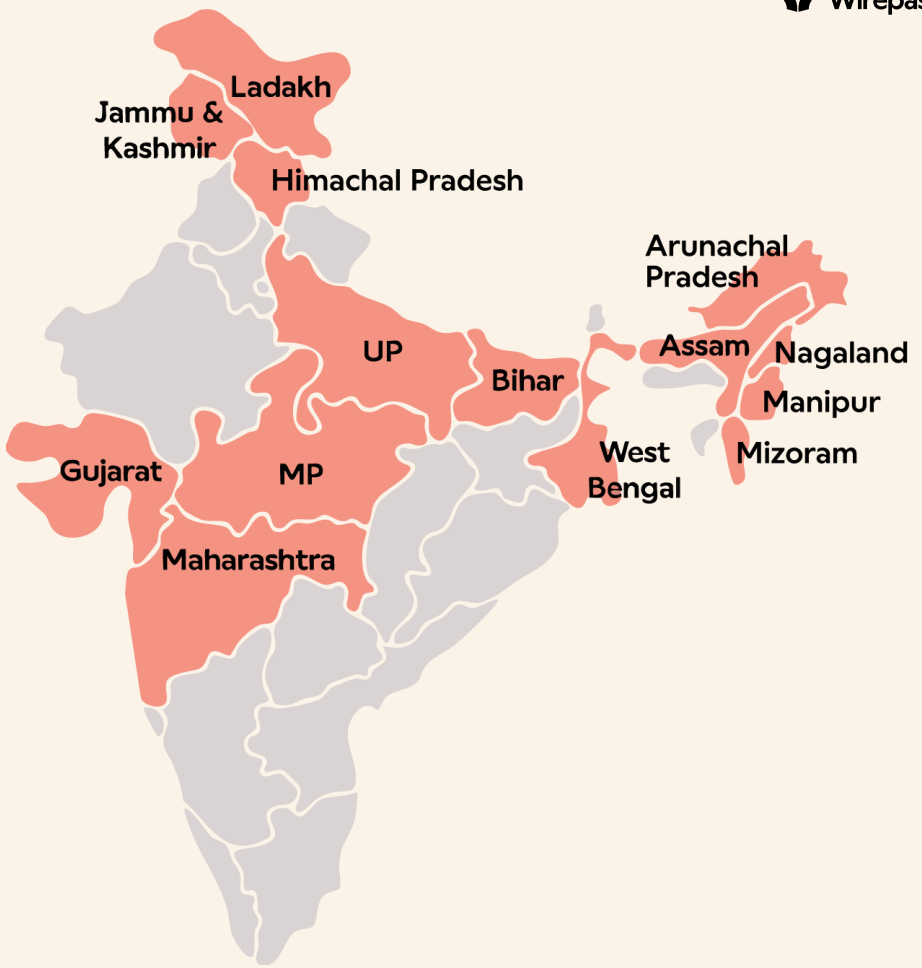

Standards-based. Scalable. Resilient

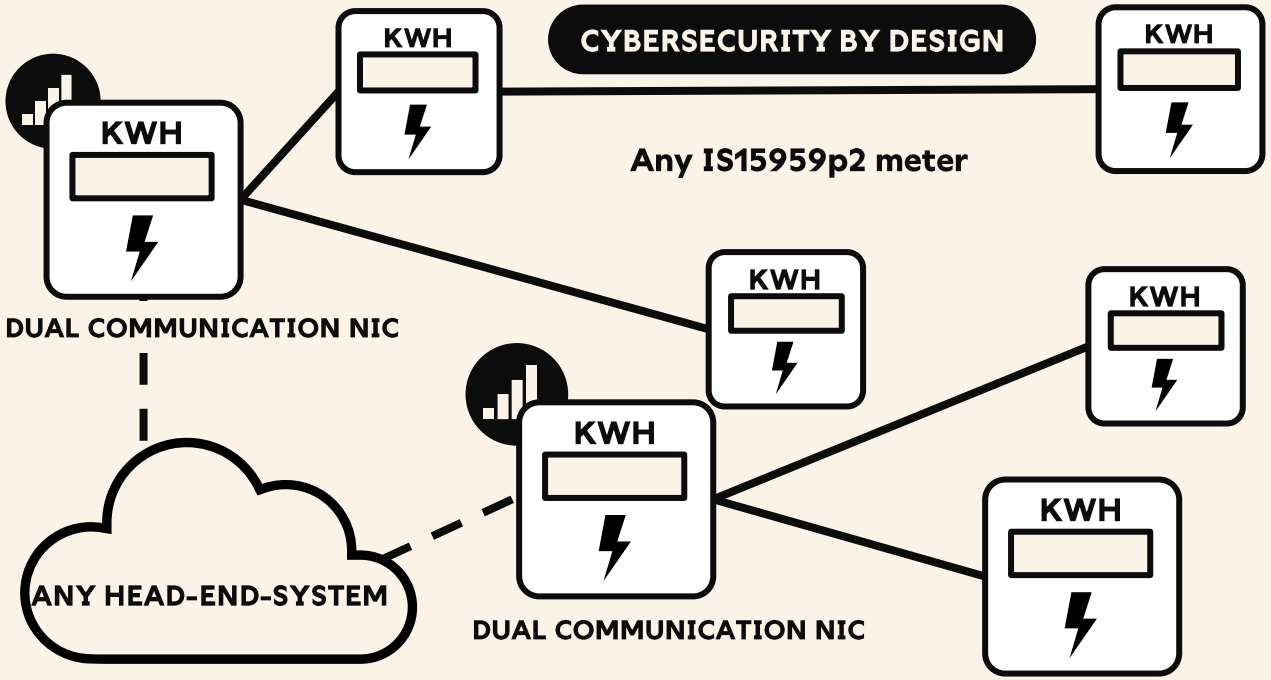

nr+ at the core of our platform

SBD & India Standards

Key requirements in India:

- **Standard:** Ensure long term alignment and interoperability, no vendor lock-in, clear system components between meter/connectivity/HES/MDM
- **Dependable** and **upgradable** for 10+ years: new vendors, new use cases, new regulation.
- **Secure:** high cybersecurity.
- **Cost-predictable:** meet SLA, low maintenance, transparency and clarity on IPR patent fees.
- **Scale** to millions, without tuning.
- **Work everywhere:** urban, rural, basements.
- **Work 10+ years** without maintenance: adapts to environmental change.

Sustained reliability anywhere without dedicated gateways.

1M+ meters

already connected in India. This is not fiction.

500

Meters per Dual Communication. This is not a patching DCU

2014

1st Dual Communication NICs deployed in Europe

Wirepas Dual Communication technology combines best of mesh and cellular. It enables connecting 99.5% of meters in any geography without need for dedicated gateways nor complex planning. And yet it retains very high network resilience to operate 10+ years without reconfiguration.

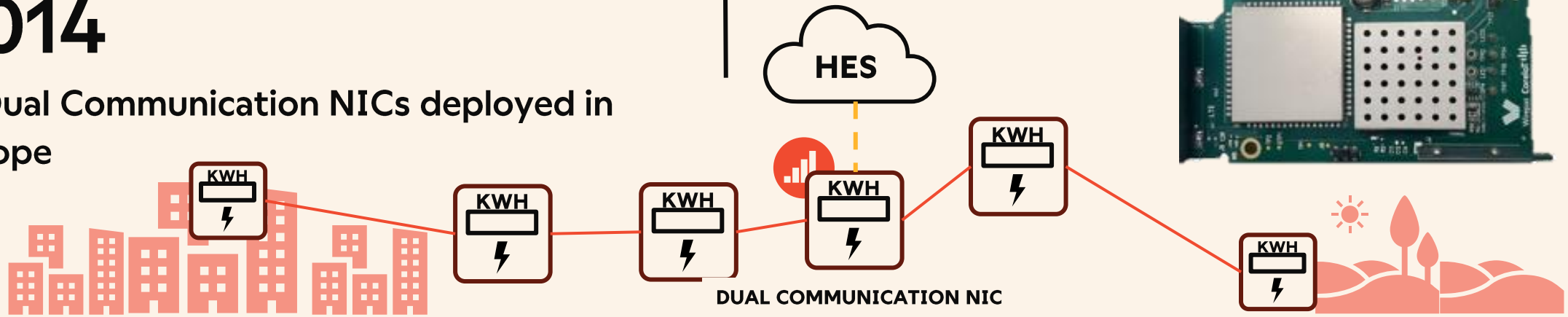

The Wirepas Platform:
Open , Interoperable, No vendor lock-in

Wirepas

Together with our partners we enable an open and truly interoperable ecosystem aligned with Ministry of Power interoperability mandates and with **proven >99% SLA**.

Meter manufacturers:

AEW, AVON, Brightgrid TECHNOLOGIES, CAPITAL A Step Ahead, EPL, electrify, HPL, iskraemeco BY ELSEWEDY ELECTRIC, Kimbāl, POLARIS, salzer TECHNOLOGIES, Schneider Electric, VISIONTEK

Head-end-systems:

bcits Smarter Solutions, BOSCH, esyasoft, FLUENTGRID seamless digital transformation, POLARIS, Probus

System integrators:

bcits Smarter Solutions, BOSCH, Probus

WIREPAS CERTIFIED

Interoperability for India's RDSS & IS.

Aligned with Ministry of Power interoperability.

nr+

Built on the principles of the NR+ standard.

Make in India.

Looking ahead together.

Key takeaways:

- **Ecosystem-led growth:** Open, interoperable, aligned with Make-in-India
- **Standards over lock-in:** NR+ approved as TSDSI Standard and Indian SBD
- **Operational simplicity:** One network, no dedicated gateways, works in any geography, combine best of Mesh and Cellular without extra infrastructure for lowest TCO and highest SLA
- **Proven at scale, in any place:** 20M+ devices globally, 10M+ smart meters live in India delivering SLA for years
- **Cybersecurity:** Secure by design, leveraging EU CRA toward India
- **India commitment:** Local presence, **building with strong local ecosystem partners**

India AMI is the largest IoT project in the world enabling a very solid ecosystem to emerge, paving the road for global expansion.
Wirepas through its technology, standard solution and global presence is here to contribute to the India ecosystem success both here and beyond!

LET'S STAY IN TOUCH.

SEBASTIEN PELLORCE

SVP AMI, INDIA, WIREPAS

sebastien.pellorce@wirepas.com

Host Utilities

TATA POWER

TATA POWER-DDL
Towards a Greener Tomorrow

BSES
BSES Rajdhani Power Limited

BSES
BSES Yamuna Power Limited

NPCL
NOIDA POWER COMPANY LIMITED

Knowledge Partner

Power Foundation of India

SESSION PARTNER

Wirepas

ORGANIZER

ISGF
India Smart Grid Forum

India SMART UTILITY Week 2026

10 – 14 March 2026, New Delhi

Supporting Ministries

MINISTRY OF POWER
GOVERNMENT OF INDIA

NITI Aayog

MINISTRY OF POWER
GOVERNMENT OF INDIA
CENTRAL ELECTRICITY AUTHORITY

DEPARTMENT OF
SCIENCE & TECHNOLOGY

AIDA
Collaboration | Innovation | Excellence

THANK YOU

For discussions/suggestions/queries email: isuw@isuw.in

www.isuw.in

Wirepas.com

isuw@isuw.in www.isuw.in @ISUW_India @India Smart Utility Week (ISUW) @India Smart Utility Week (ISUW) @indiasmartgridforum